MOSER
SINKS & FAUCETS

SINK SPECIFICATIONS

DESIGNER KITCHEN LINE
Single Bowl Undermount
Model M3118

What sets MoSER sinks apart

- Deep Drawn modern European design
- Professional quality stainless steel – 18 gauge
- Corrosion resistant – 304 stainless steel
- Single bowl sink
- Stone Guard undercoating over rubber pad for superior sound dampening
- Supplied with template and strainer
- 100% recyclable
- Limited lifetime warranty
- cUPC certified

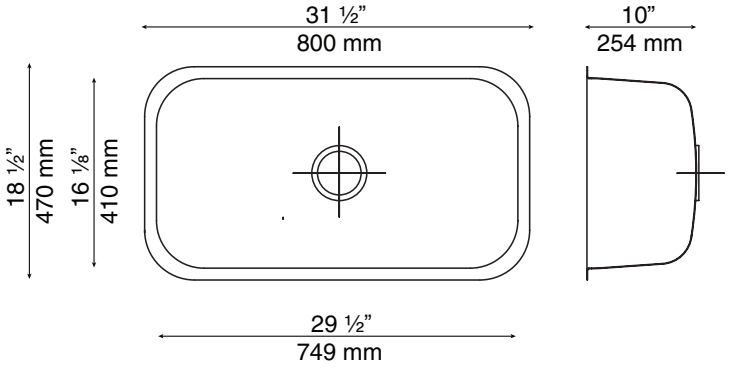

Technical Specifications

- Outside dimensions: 31 ½” x 18 ½” x 10”
- Inside dimensions: 29 ½” x 16 ⅛” x 10”
- 3 ½” drain opening
- Minimum Cabinet Size: 34”

Warranty

Every MoSER sink comes with a limited lifetime warranty. For more details please refer to our product warranty section on our website.

MoSER makes all efforts to provide accurate information, all dimensions are nominal, cannot be guaranteed and are subject to change or cancellation. MoSER assumes no responsibility for the use of superseded voided specifications.

mosersinks.com