MOSER
SINKS & FAUCETS

SINK SPECIFICATIONS

NICKEL BATHROOM LINE
Single Bowl Undermount
Model MN2115

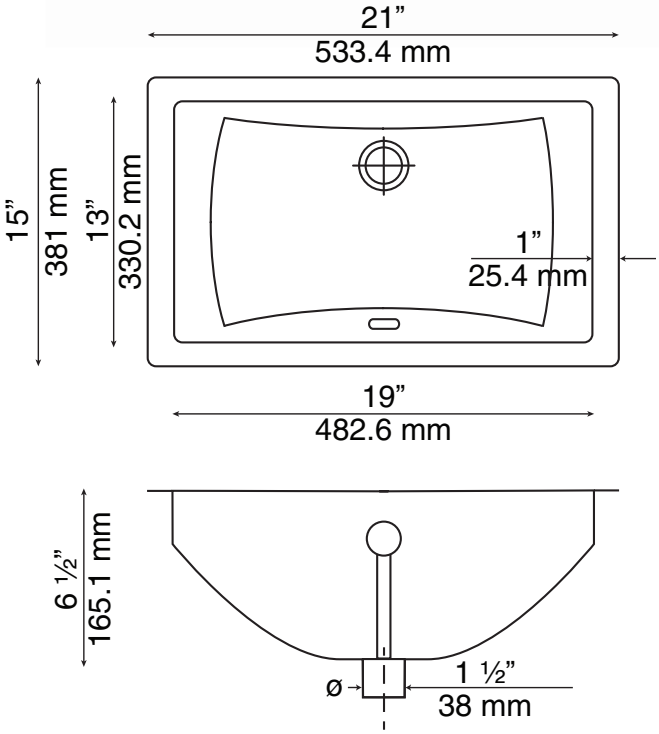

What sets MoSER sinks apart

- Hand crafted using traditional European process
- Hammered nickel finish
- Easy To Clean and Maintain - Living Finish that will patina over time
- Premium brass plated nickel – 18 Gauge
- Built-in overflow
- Strainers sold separately
- 100% recyclable
- cUPC Certified

Technical Specifications

- Outside dimensions: 21” x 15” x 6 ½”
- Inside dimensions: 19” x 13” x 6 ½”
- 1 ½” drain opening
- Minimum Cabinet Size: 23”

Important

Due to the handcrafted nature of this product, it will vary in finish, texture, hammering, and other details. Dimensions may vary up to 1/2” (13mm). We strongly recommend waiting for the actual product before making any installation cuts.

Warranty

Every MoSER sink comes with a limited lifetime warranty. For more details please refer to our product warranty section on our website.

MoSER makes all efforts to provide accurate information, all dimensions are nominal, cannot be guaranteed and are subject to change or cancellation. MoSER assumes no responsibility for the use of superseded voided specifications.

RoHS Compliant Lead Free · Lifetime Warranty · UPC C ®

mosersinks.com