MOSER
SINKS & FAUCETS

FAUCET SPECIFICATIONS

DESIGNER HOME LINE
Single Lever Pull-Out
Model Melbourne

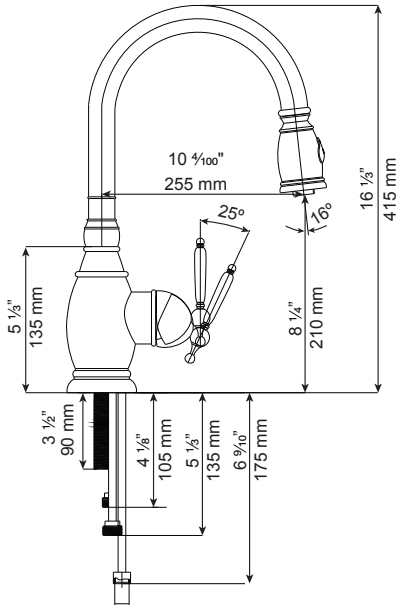

What sets MoSER faucets apart

- Modern European design
- Professional quality stainless steel
- Corrosion resistant 18/10 stainless steel 304
- Kerox Ceramic Cartridge
- Neopearl Aerator
- Pullout Faucet Head
- Lead Free
- 100% recyclable
- cUPC certified

Technical Specifications

- Single Hole – 1 ⅜”
- Satin Finish
- Height – 16 ⅓”

Warranty

Every MoSER faucet comes with a limited lifetime warranty. For more details please refer to our product warranty section on our website.

MoSER makes all efforts to provide accurate information, all dimensions are nominal, cannot be guaranteed and are subject to change or cancellation. MoSER assumes no responsibility for the use of superseded voided specifications.

mosersinks.com